SMART MACHINE TOOL

SM1370

Installation Packet

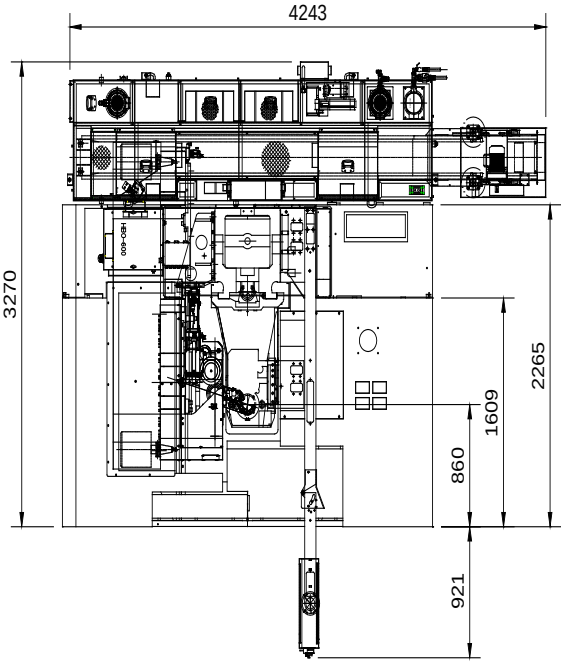

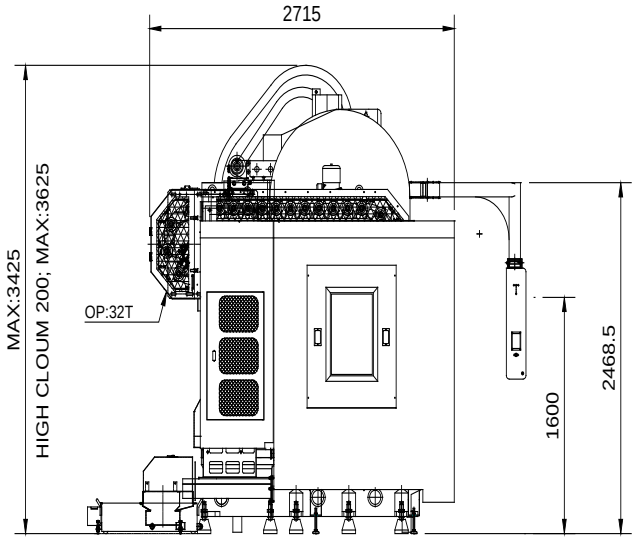

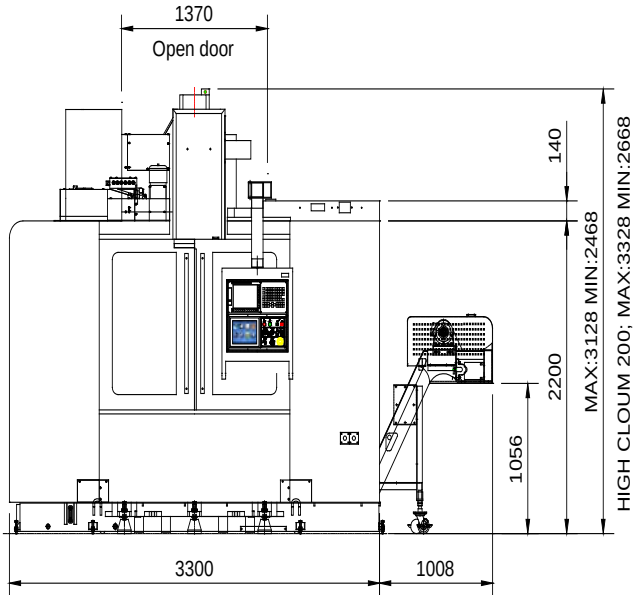

*IMPORTANT NOTE

TOOL CHANGER

SHIPS NOT MOUNTED

Link type chip conveyor Foundation Diagram

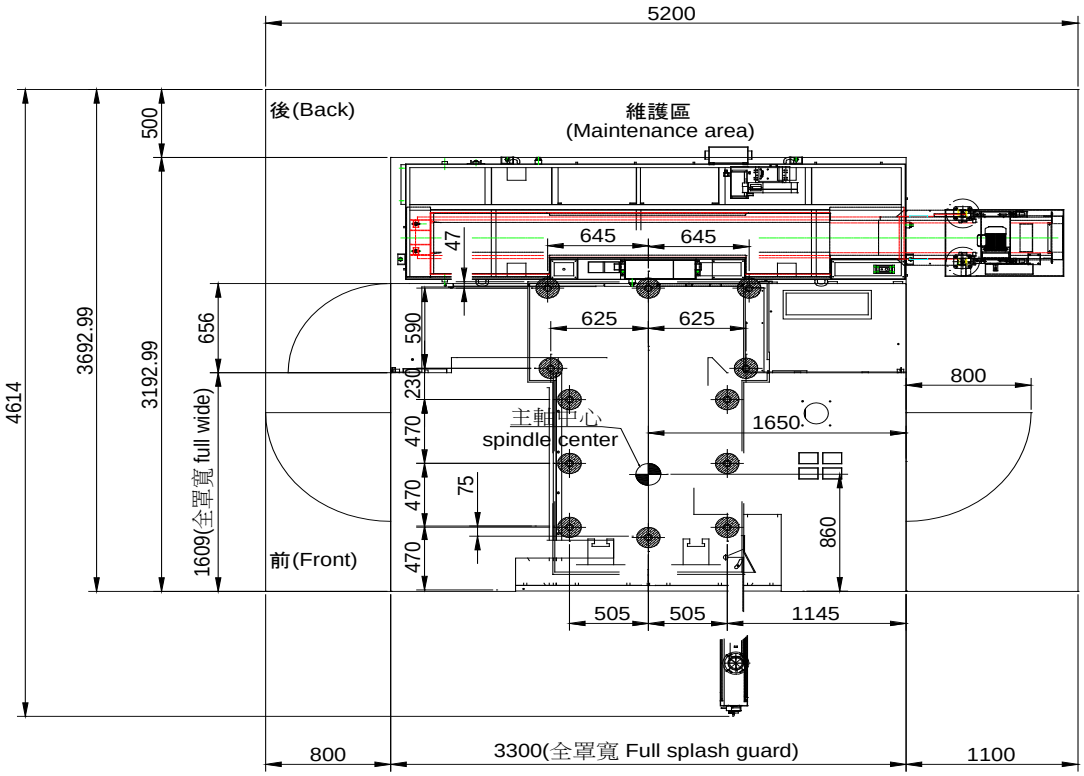

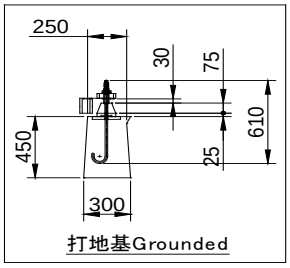

打地基Grounded

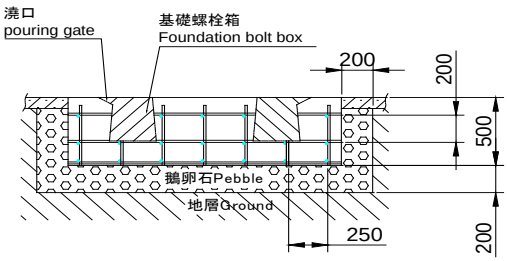

地基鋼筋埋設位置圖

The construction diagram of the foundation reinforcing bar

Model	Unit	SM-1370
Table Weight	kg	388
Max. Table Load	kg	1500

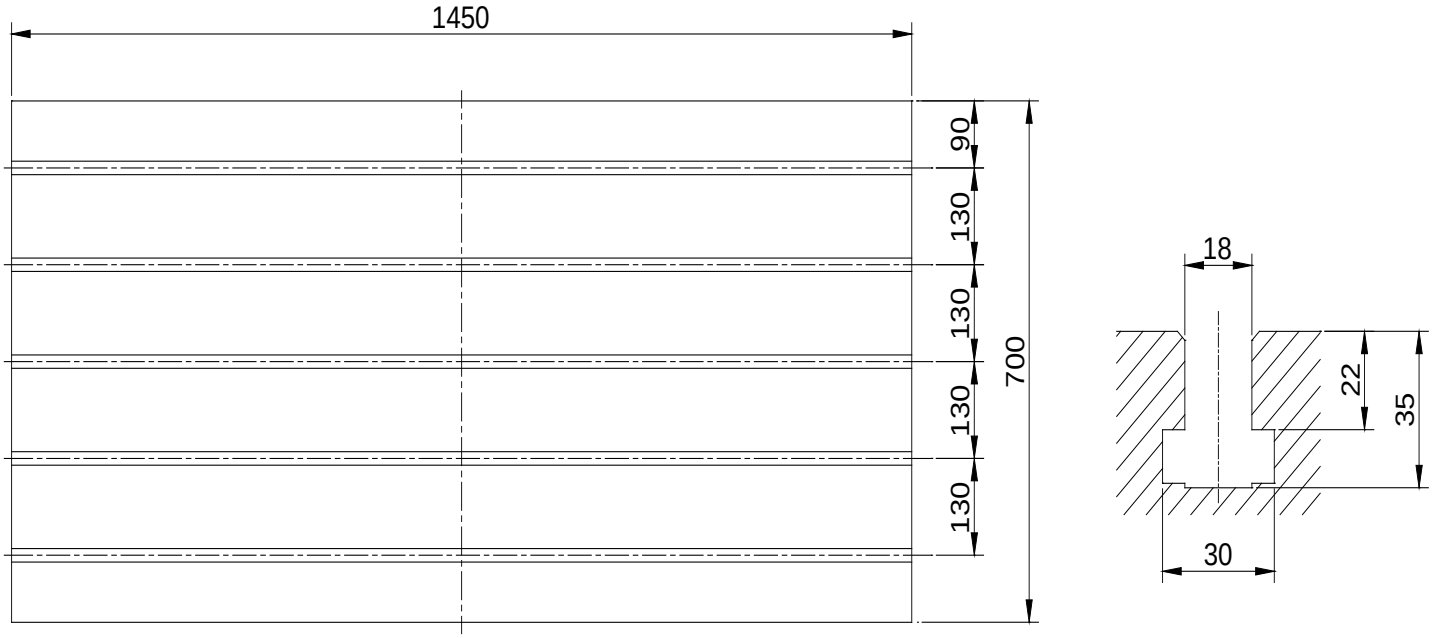

(工作台與 T 型槽尺寸圖)

1.6 主軸鼻端至工作台距離 Distance from Spindle End to Table

Model	Unit	SM-1370
Distance from Spindle End to Table (Height Between Column)	mm	120~780
Distance from Spindle End to Table Additional Column height 200mm	mm	320~980
Distance from Spindle End to Table Additional Column height 200mm	mm	520~1180
Distance from Spindle Center to Column	mm	745

Other Specifications

Description	Unit	SM1370	SM1570
Air source	kg/cm^2	6.5	6.5
Electric power consumption	KVA	30 ~ 45	30 ~ 45
Net weight	Kg	8800 (Drum) 9000 (ATC)	9400 (Drum) 9900 (ATC)
Coolant Capacity	l	275	285
(W*L*H) Packing Size(machine on pallet)	mm	4200*3050*3700	4700*3050*3700

NOTE:
1. The weight will vary depending on the magazine, the tank and the option
2. Actual value may vary depending on accessory.

Required air pressure	psi	95
Electrical Power consumption	KVA	50T=55 40T=40
	Amps @220 V	50T=144 40T=104
Voltage		220V +/- 10%

Oil Inlet

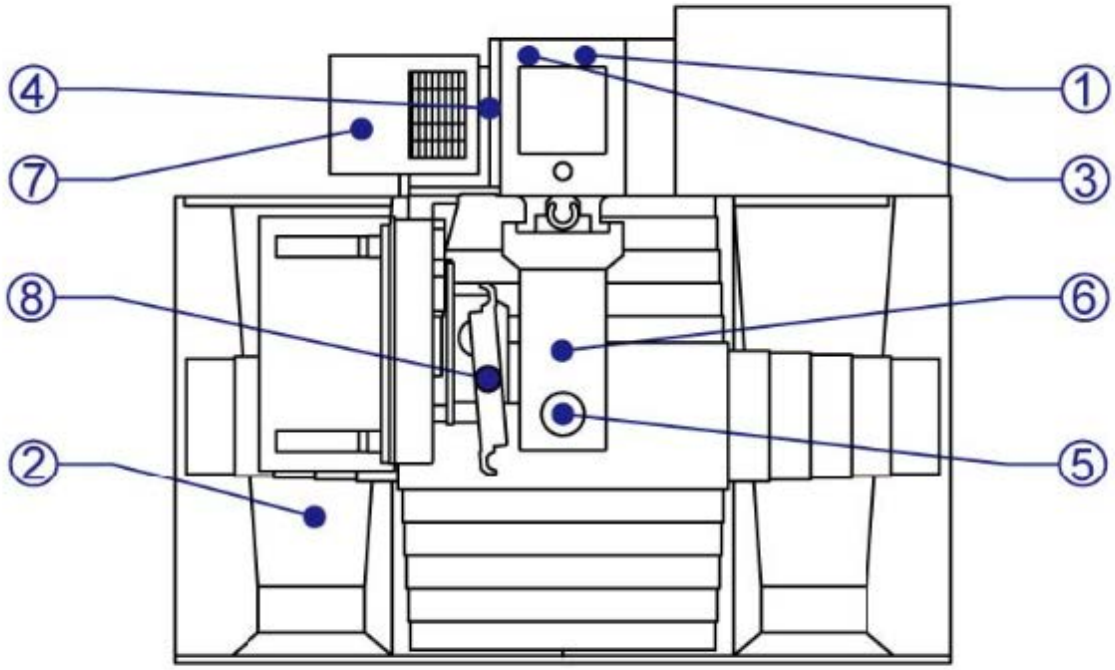

8112000024-

Required at install	No.	Replenishing Point	Oil Type	Oiling Period	Oiling Method
	1	Air Regulator	ISO-VG 32	Check every day	Fill oil to upper limit of oil gauge
*	2	Coolant Tank			
	3	Oil Lubricator	ISO-VG 68	Warning Alarms	
	4 (OP.)	Oil Air Lubricator (#40 G8K)	ISO-VG 32		
	5	Booster Cylinder	ISO-VG 32	Check every 3 month	
50T only*	6 (OP.)	Gearbox of Head (G)	ISO-VG 32	Check every day	Fill oil to upper limit of oil gauge. (Change every 6 month to one year.)
	7 (OP.)	Spindle Oil Cooler (P.D)	ISO-VG 10		
	8 (OP.)	ARM Mechanism ATC	ISO-VG 150		

#40

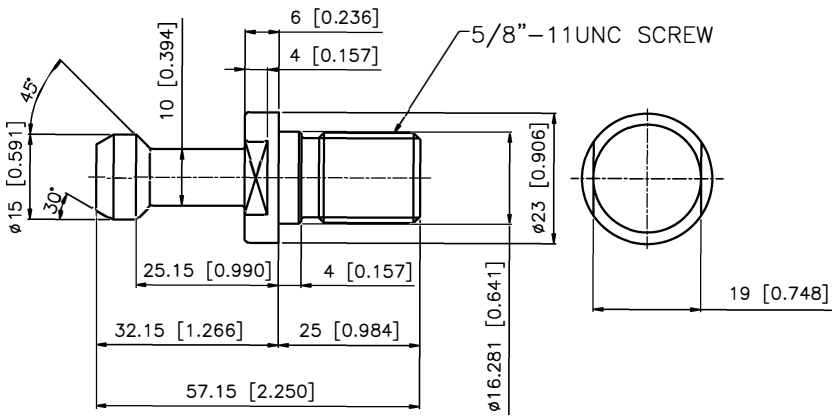

Lyndex PN
Non CTS
C40–4500
CTS
C40–4500H

#50

Tool Shank P50T-1

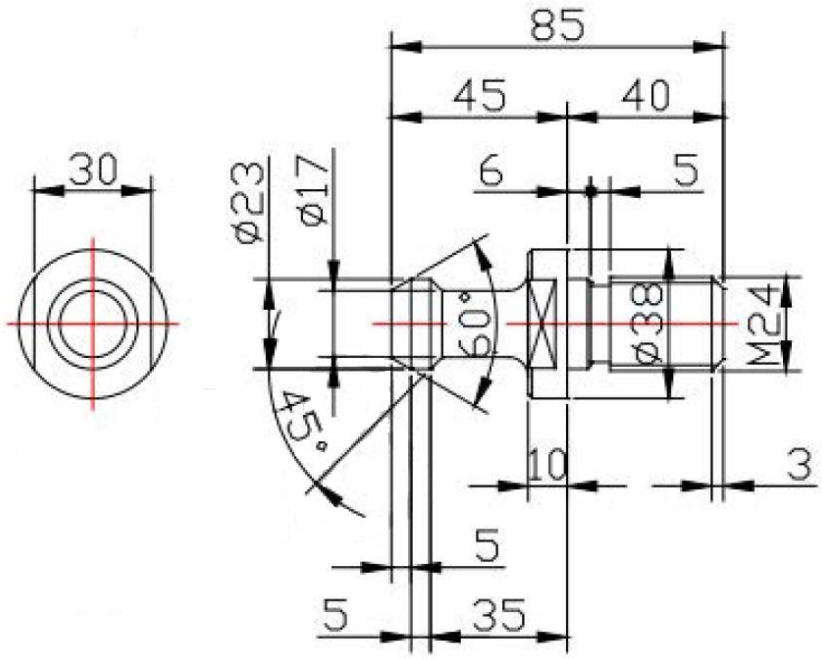

Trucking dimensions	
SM1050	146” x 91 x 101 @ 12,538
Accessories	156” x 46 x 79 @ 983
SM1100	146” x 91 x 101 @ 17,518
Accessories	156 x 46 x 79 @ 3,097
SM1370	: 142” x 92 x101 @ 18,801
Accessories	177 x 46 x 79 @ 4,583
SM1570	146 x 91 x 101 @ 19,731
Accessories	191 x 91 x 79 @ 3,536
Accessories	157 x 91 x 79 @ 2,465
SM1682	
SW216	445” x 164 x 158 @ 59,305
SW316	445” x 164 x 158 @ 66,668
HSA316	445” x 164 x 158 @ 64,199