SMART MACHINE TOOL

NL 1500(M)

Installation Packet

N210000 4A00

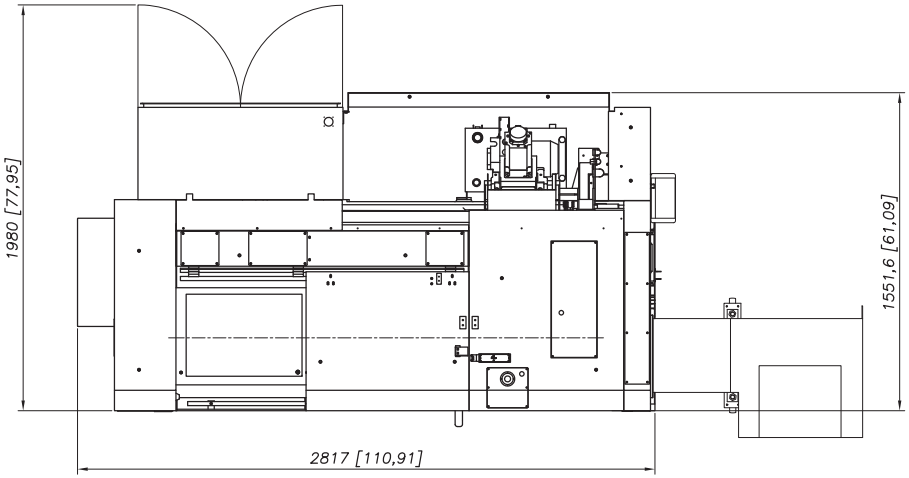

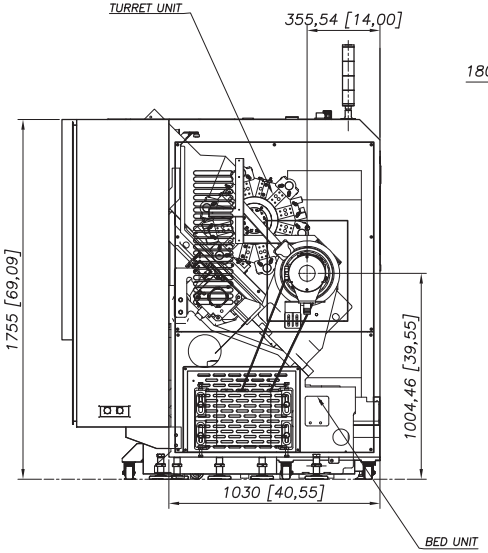

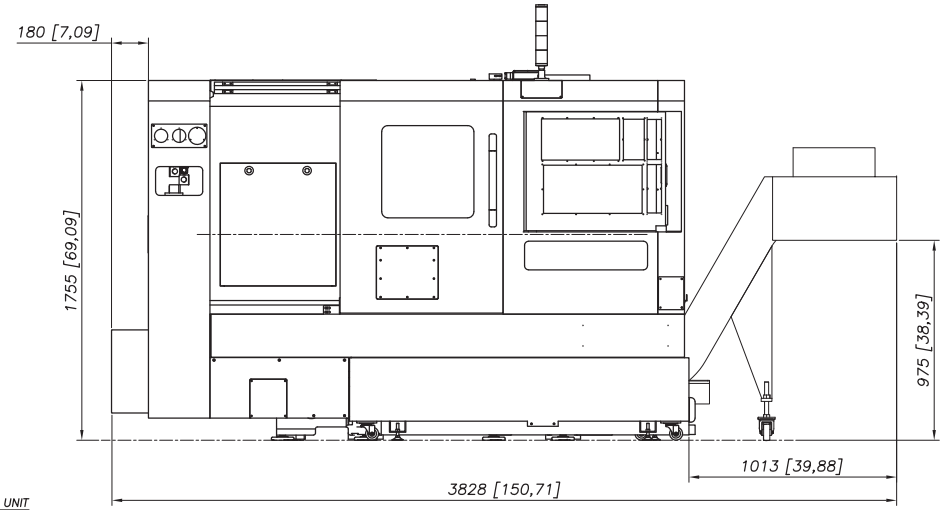

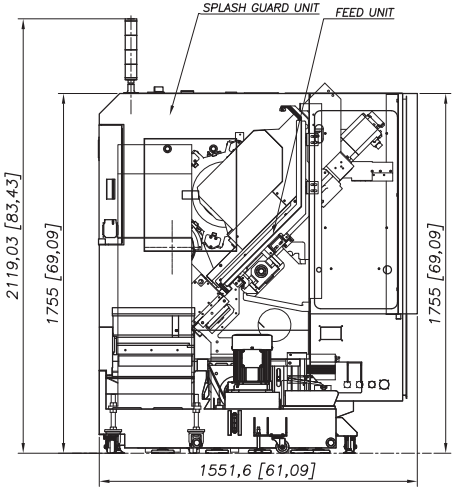

MARK	REVISION	DATE	REV'D	CHE'D

MODEL: NL200, NL250

APP'D	GENERAL TOLERANCE (MACHINING) 0.5~ 6 ± 0.1; 6~ 30 ± 0.2; 30~ 120 ± 0.3; 120~ 315 ± 0.5; 315~1000 ± 0.8; 1000~2000 ± 1.2	HEAT TREATMENT		SMTK
REV'D				UNIT ASS'Y NL200/250 LAY-OUT
CHE'D		MATERIAL	Q'TY 1/대	NAME GENERAL ASS'Y
DES'D	UNLESS OTHERWISE SPECIFICATION CHAMF & CORNER CO. 3, RO. 8	PLATING	SCALE 1/1	N210000 4A00
DATE				

SMTK_A1

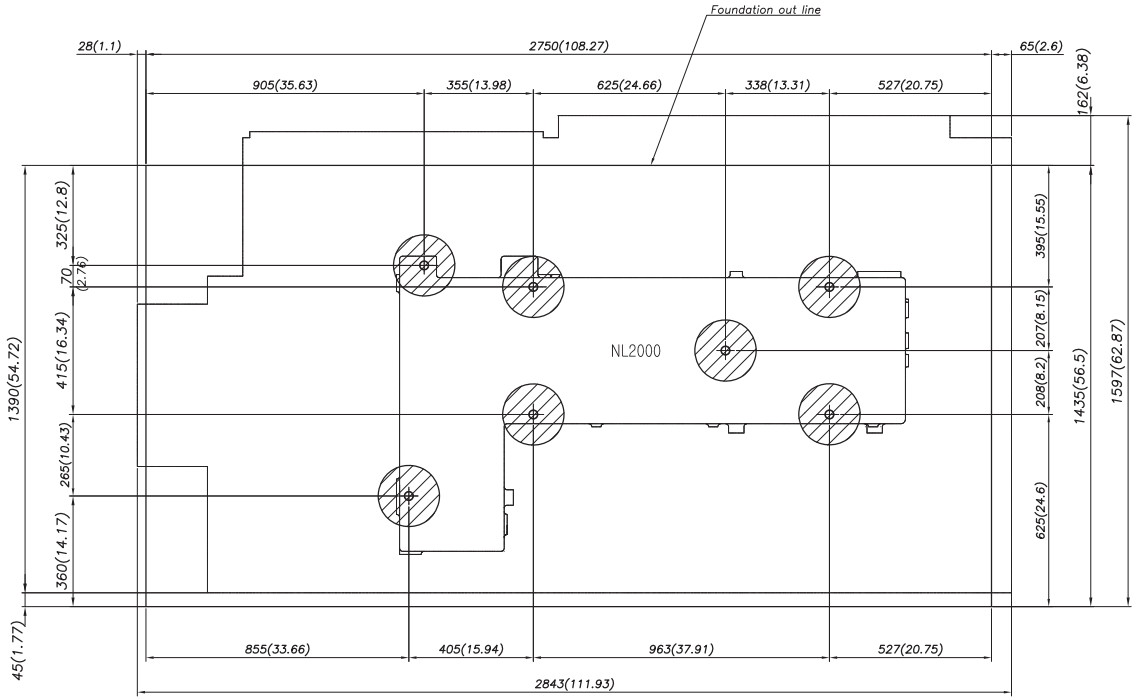

Operator's side

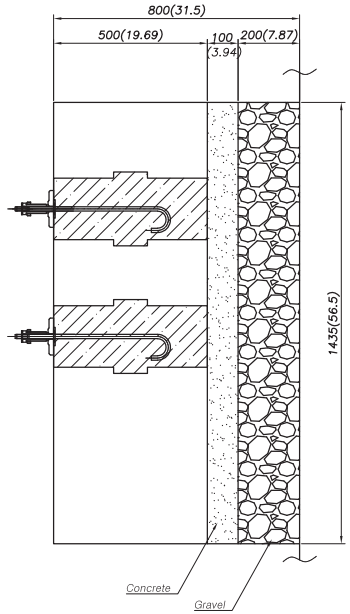

Note1) This drawing shows the standard foundation. Modify the concrete thickness according ground condition.

Before the first concrete is completely dry, chamfer the area facing the outside of the machine by approximately 100 mm.

Concrete strength (28 days after placing concrete) should be 20.6 Mpa(2986.2 psi) or more.

Note2) Because 100 mm(3.94 inch) of styrofoam must Adhere to the inside surface of ditch, dig the foundation 100 mm(3.94 inch) outside of the outline of the foundation.

Note3) Unit : mm(inch)

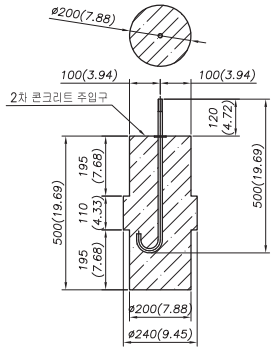

Foundation Bolt Detail

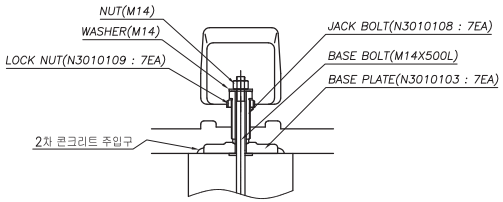

(S=2/1)

MARK	REVISION	DATE	REV'D	CHE'D	MODEL	NL2000

APP'D		GENERAL TOLERANCE (MACHINING) 0.5~ 6 ± 0.1; 6~ 30 ± 0.2; 30~ 120 ± 0.3; 120~ 315 ± 0.5; 315~1000 ± 0.8; 1000~2000 ± 1.2	HEAT TREATMENT		SMTK
REV'D					UNIT ASS'Y NL2000 — LAY-OUT
CHE'D			MATERIAL	Q'TY 1/대	NAME FOUNDATION ASS'Y
DES'D		UNLESS OTHERWISE SPECIFICATION CHAMF. & CORNER CO. 3, RO. 8	PLATING	SCALE 1/8	N2000007A00
DATE					

SMTK_A1

Conestoga Trailers arranged by Walsh Logistics required for all machine shipments			
Model	**Description**	ESTIMATED PACKING	
		(Size - FEET)	**(Size - LBS)**
NL150/200/250	MACHINE + CONVEYOR	13x7.5x7.5	10,500
NL1500(M)	MACHINE + CONVEYOR	13x7.5x7.5	10,500
NL2000(M)(B)	MACHINE + CONVEYOR	13x7.5x7.5	10,500
NL2000SY	MACHINE + CONVEYOR	17.5 x 7.6 x 8.1	14,330
NL2500S	MACHINE + CONVEYOR	14x7.6x7.4	12,500
NL2500(M)	MACHINE + CONVEYOR	16.7x7.6x7.4	13,900
NL3000(M)	MACHINE + CONVEYOR	16.7x7.6x7.4	14,500
NL3000L(M)	MACHINE + CONVEYOR	19.5x7.6x7.4	16,800
NL4000(M)	MACHINE	16x7.5x8	25,000
NL4000(M)	CHIP CONVEYOR	14x3.1x5	1,925
NL5000(M)	MACHINE	16x7.5x8	25,500
NL5000(M)	CHIP CONVEYOR	14x3.1x5	1,925
NL5000L(M)	MACHINE	20x7.5x8	32,000
NL5000L(M)	CHIP CONVEYOR	18x3.1x5	2,500
NL6000(M)	MACHINE	18.7x7.5x8.4	35,250
NL6000(M)	CHIP CONVEYOR	15.9x7.5x5.75	2,350
NL6000L(M)	MACHINE	21x7.5x8.5	40,000
NL6000L(M)	CHIP CONVEYOR	18.2x7.5x5.75	4,000
NL6000XL(M)	MACHINE	26x7.5x8.5	50,000
NL6000XL(M)	CHIP CONVEYOR	22.5x7.5x5.75	5,500
NL7000L(M)	MACHINE		
NL7000XL(M)	MACHINE		

MACHINE MODEL	KVA	AMPS @ 220	Coolant	Slideways	Hyd. Unit	Transmission	Chuck	Oil for Air
NL150/200/250	31	82	48	.79 gal	5.3 gal	n/a	.2 oz daily	N/A
NL1500(M)	31	82	48	.79 gal	5.3 gal	n/a	.2 oz daily	.6 oz
NL2000(M)	31	82	48	.79 gal	5.3 gal	n/a	.2 oz daily	.6 oz
NL2500S	40	105	48	.79 gal	5.3 gal	0.75	.2 oz daily	.6 oz
NL2500(M)	40	105	53	.79 gal	5.3 gal	0.75	.2 oz daily	.6 oz
NL3000(M)	40	105	63	.79 gal	5.3 gal	0.75	.2 oz daily	N/A
NL4000(M)	55	144	63	.79 gal	6.4 gal	0.75	.2 oz daily	N/A
NL5000(M)	55	144	63	.79 gal	6.4 gal	0.75	.2 oz daily	N/A
NL5000L(M)	65	170	130	.79 gal	6.4 gal	0.75	.2 oz daily	N/A
NL6000(M)	65	170	105	.79 gal	15 gal	0.75	.2 oz daily	N/A
NL6000L(M)	65	170	150	.79 gal	15 gal	0.75	.2 oz daily	N/A
NL6000XL(M)	65	170	180	.79 gal	15 gal	0.75	.2 oz daily	
NL7000L(M)	65	170	150	.79 gal	15 gal	2 gal	.2 oz daily	N/A
NL7000XL(M)	65	170	180	.79 gal	15 gal	2 gal	.2 oz daily	N/A
				Shell Oil T68	Mobil DTE	Mobil Oil Light		DTE Light
				Mobil Vactra#	24	ISO VG 32	grease daily	check daily
				check daily	check daily	check daily		

N22300014A00

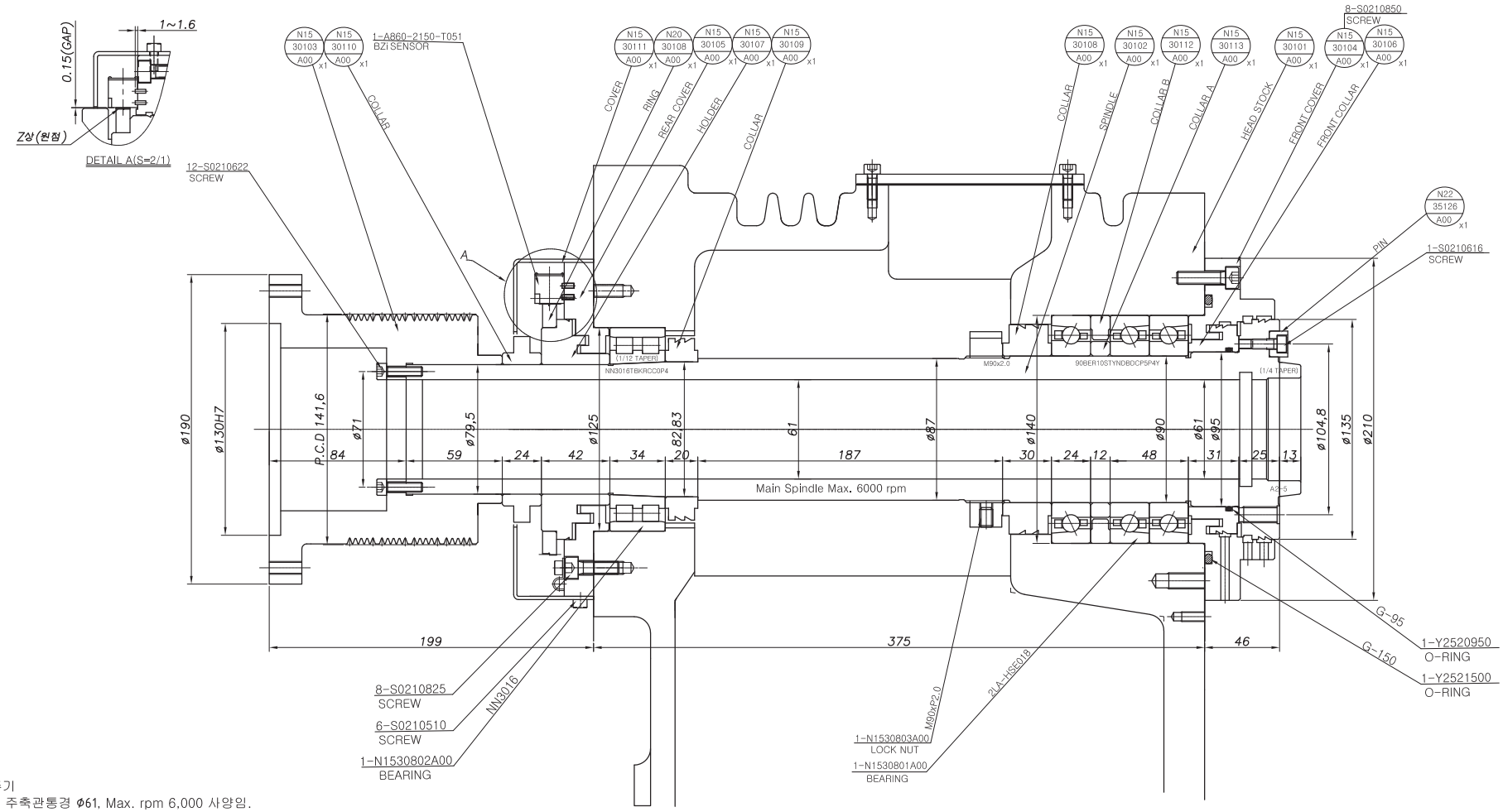

주기
1. 주축관통경 ø61, Max. rpm 6,000 사양임.
2. 90BER와 FONT COVER 의 죔새 +0.01~+0.03
3. NN3016 RADIAL틈새는 GB게이지로 설정
4. GREASE 주입량
   4.1 NSK 기준
   - 90BER : 5.5cc x 3(NBU-15)
   - NN3016 : 4.7cc(NBU-8EP)
5. 베어링 조립
   5.1 베어링내륜과 스핀들 끼워맞춤(T1~T5:목표치 T3)
   5.2 베어링 외륜과 하우징의 끼워 맞춤
   - 90BER : L3~L8 : 목표치 L5
   - NN3016 : L2~T2 : 목표치 0
6. FANUC-0i TF (SPINDLE MOTOR βil12) 적용 사양 임.

MARK	REVISION	DATE	REV'D	CHE'D

MODEL NL150

APP'D	GENERAL TOLERANCE (MACHINING) 0.5~ 6 ± 0.1; 6~ 30 ± 0.2; 30~ 120 ± 0.3; 120~ 315 ± 0.5; 315~1000 ± 0.8; 1000~2000 ± 1.2	HEAT TREATMENT	SMTK
REV'D			UNIT ASS'Y NL150 HEAD STOCK
CHE'D		MATERIAL / Q'TY 1/대	NAME HEAD STOCK ASS'Y
DES'D	UNLESS OTHERWISE SPECIFICATION CHAMF. & CORNER CO. 3, RO. 8	PLATING	SCALE 1/1.25
DATE			N1530001A00 1/2

SMTK_A1

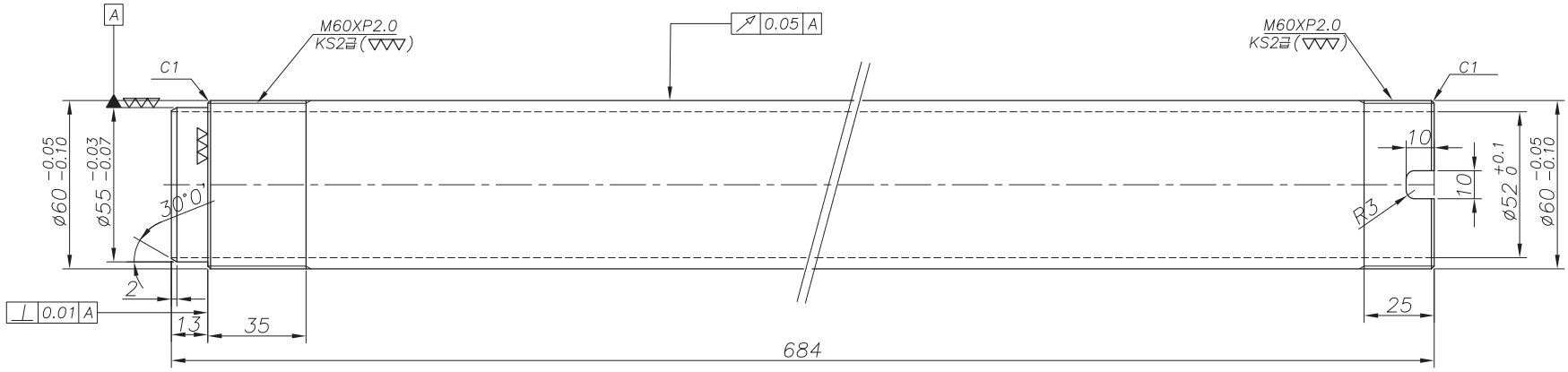

MODEL	NL150/M	UNIT NUMBER	9000	UNIT DESCRIPTION	ACCESSORIES	DWG NO	N1590101A	PART NAME	DRAW PIPE FOR NL150/M	PAGE	68