SMART MACHINE TOOL

SM 600

Installation Packet

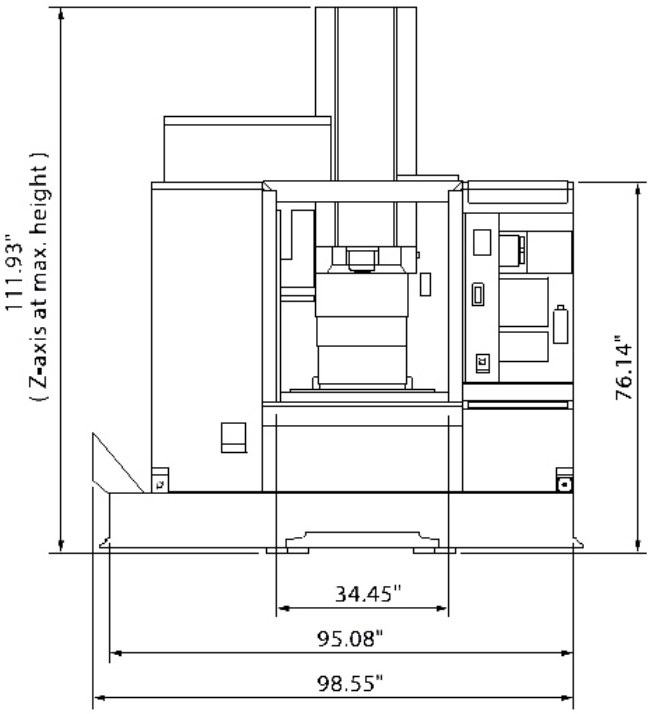
111.93"
(Z-axis at max. height)
76.14"
34.45"
95.08"
98.55"

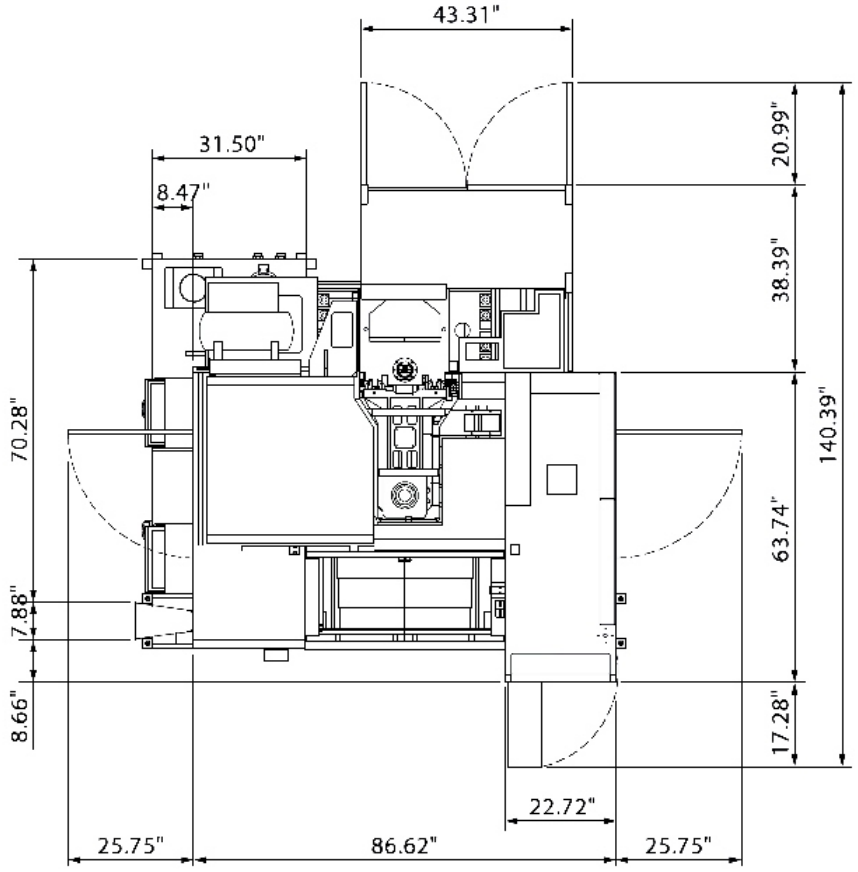
43.31"
31.50"
8.47"
20.99"
38.39"
140.39"
70.28"
63.74"
7.88"
8.66"
17.28"
22.72"
25.75"
86.62"
25.75"

(SM 600)

#40

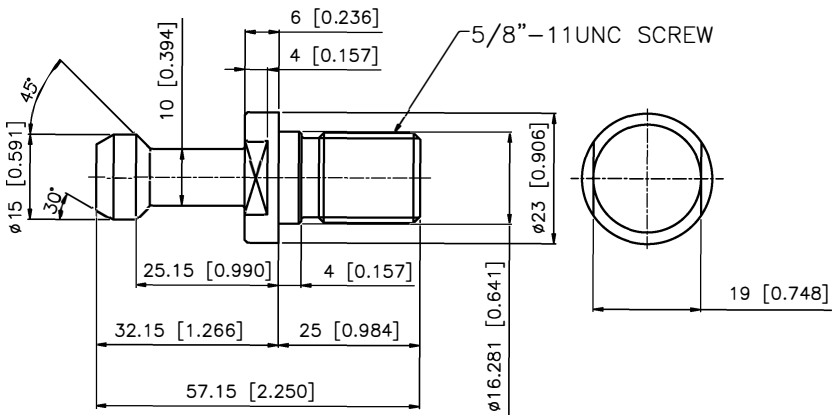

Lyndex PN
Non CTS
C40–4500
CTS
C40–4500H

#50

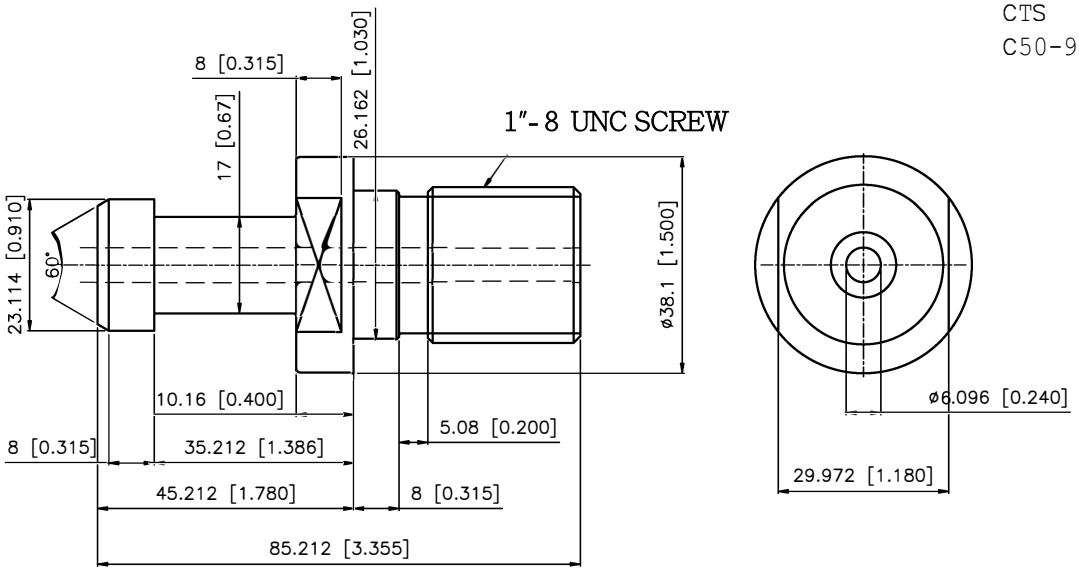

Lyndex PN
Non CTS
C50-9000
CTS
C50-9000H

POWER AND LUBRICATION REQUIREMENTS

10/1/2018 MACHINE MODEL	KVA	AMPS @ 220	Coolant	Slideways	Chilled Geared Headstock	Oil for Air	Chiller OilTank
SM850	25	65	87 gal	6L	N/A	6oz	20L
SM1000	25	65	89 gal	6L	N/A	6oz	20L
SM1688	45	118	116 gal	6L	20L	6oz	N/A
SM2600	50	131	360 gal	6L	20L	6oz	N/A
				Shell Tonna S3M68		Mobil DTE Light	Mobil Velocite #3
SM600	25	65	85 gal	4.5L	N/A	6oz	20L
SM1000	25	65	85 gal	4.5L	N/A	6oz	20L
SM965 8K	25	65	95 gal	4.5L	1.2 gal	6oz	N/A
SM965 12K	40	104	95 gal	4.5L	N/A	6oz	20L
SM1165 8K	25	65	99 gal	4.5L	1.2 gal	6oz	N/A
SM1165 12K	40	104	99 gal	4.5L	N/A	6oz	20L
SM1165 6K	40	104	99 gal	4.5L	1.2 gal	6oz	N/A
SM1365 6K	40	104	103 gal	4.5L	1.2 gal	6oz	N/A
SM1365 12K	40	104	103 gal	4.5L	N/A	6oz	20L
SM1565 12K	40	104	105 gal	4.5L	N/A	6oz	20L
SM1565 6K	40	104	105 gal	4.5L	1.2 gal	6oz	N/A
SM1575 12K	40	104	105 gal	4.5L	N/A	6oz	20L
SM800APC	30	78		4.5L	N/A	6oz	20L
				Shell Tonna S3M68	Mobil DTE 24	Mobil DTE Light	Mobil Velocite #6
				check daily	check daily	check daily	check daily

MCV Series:
Air: 8 CFM @ 80-100 PSI
Air Fitting Size: 5/8 DIA. MINIMUM ID

Conestoga Trailers arranged by Walsh Logistics required for machine shipments			
Model	**Description**	ESTIMATED PACKING	
		(Size - INCHES)	**(Size - LBS)**
SM600	MACHINE		
SM600	ACCESSORIES		
SM850	MACHINE	9'2 x 7'7 x 8'1	9,259
SM850	ACCESSORIES	9' x 7'3 x3'1	1,003
SM1000	MACHINE	9'7 X 7'7 X 8'6	12,787
SM1000	ACCESSORIES	10'5 X 7'3 X 6'5	1,874
SM1000(NEW)	MACHINE		
SM1000(NEW)	ACCESSORIES		
SM965-24T	MACHINE	11'2 x 7'7 x 8'3	15,783
SM965-36T	MACHINE	16'1 X 7'7 X 8'2	15,783
SM965-36T	TOOL MAGAZINE	3'1 X 3'8 X 4'2	1,433
SM1165-24T	MACHINE	12'3 X 7'7 X 8'3	15,432
SM1165-36T	MACHINE	16'1 X 7'7 X 8'2	15,432
SM1165-36T	TOOL MAGAZINE	3'1 X 3'8 X 4'2	1,433
SM1165-30T	MACHINE	16'1 X 7'7 X 8'3	16,424
SM1165-30T	TOOL MAGAZINE	3'7 x 5'5 x 5'5	1,984
SM1365-36T	MACHINE	16'3 X 7'7 X 8'1	16,555
SM1365-36T	TOOL MAGAZINE	3'1 X 3'8 X 4'2	1,433
SM1365-30T	MACHINE	16'3 X 7'7 X 8'1	16,755
SM1365-30T	TOOL MAGAZINE	3'7 X 5'4 X 5'6	1,984
SM1565-36T	MACHINE	17'8 x 7'7 x 8'1	18,078
SM1565-36T	TOOL MAGAZINE	3'1 X 3'8 X 4'2	1,433
SM1565-30T	MACHINE	17'8 x 7'7 x 8'1	18,298
SM1565-30T	TOOL MAGAZINE	3'7 x 5'5 x 5'5	1,984
SM1575-36T	MACHINE	13.25'x7.6'x7.6'	19,000
SM1575-36T	TOOL MAGAZINE	3'7 x 5'5 x 5'5	1,984
SM1688	MACHINE & ACCESSORIES	17'9 X 13'6 X 11'3	42,064
SM2600	MACHINE	17'9"x13'2"x13'	47,399
SM2600	ACCESSORIES	18'1"x7'6"x6'5"	5,512
SM2600	ACCESSORIES	15'9"x7'6"x7"8"	7,716
SM800-APC	MACHINE	11'9 x 7'7 x 8'3	16,535
SM800-APC	ACCESSORIES(tool magazine, chip conveyor, etc.)	13' x 7'6 x 6'4	3,616
Conestoga not requried for SM1688 and SM2600			